MIR046888

MIR

GLAMOX

MIRS67 218HF TW PC BN20

Elnumber:

EAN-nr: 7054130468882

Stock code: B

High quality luminaire for marine use. The luminaire has a hinged geartray with quick connector for easy maintenance. The luminaire housing is made of Galfan (Z) or acid resistant stainless steel (S), with white stove-enamelled epoxy/polyester powder finish. Housing of Galfan (Z) not suitable for marine outdoor installation. The cover is made of impact-proof polycarbonate (PC). Emergency versions are available with integrated (Ta=25°C) battery or external battery box, 1.5 or 3 hours battery duration.

Technical data	
Maximum ambient temperature (°C)	45
IK Classification	10
Minimum ambient temperature (ºC)	-25
IP classification	66/67
Corrosion class	C5

Dimensions	
Width (mm)	165
Length (mm)	724
Height (mm)	128
Net weight (kg)	3,6
Gross weight (kg)	3.9
CCmax (mm)	704
CCmin (mm)	704

Body	
Colour of body	White
Body material	Stainless Steel AISI 316L

Optic	
Optic	Clear
Material of diffuser	Polycarbonate
Lightdistribution Up/Down	10/90

Electrical data	
Maximum voltage +10% (V)	240
Maximum frequency +5% (Hz)	60
Minimum frequency -5% (Hz)	50
Minimum Voltage -10% (V)	220
Total consumption (W)	36
Number of luminaires on a 16A MCB type C (80% load)	60
Number of luminaires on a 16A MCB type B (80% load)	30
Number of luminaires on a 10A MCB type B (80% load)	18
Number of luminaires on a 10A MCB type C (80% load)	37

Ballast/Driver	
Type of ballast/driver	HF (High frequency)
Number of ballast/driver	1

Light data	
Lamp power (W)	18
Lamp base	G13
Number of lamps	2
Light source	T8

Termination	
Number of cable glands	2
Number of blind plugs	2
Type of cable gland	M20-Nickel plated brass
Type of blind-plug	M20-Nickel plated brass
Type of through wiring	5x2,5
Maximum cable diameter	12
Minimum cable diameter	4
Termination	5x2X6 SC

MIR046888

MIR

Drawings
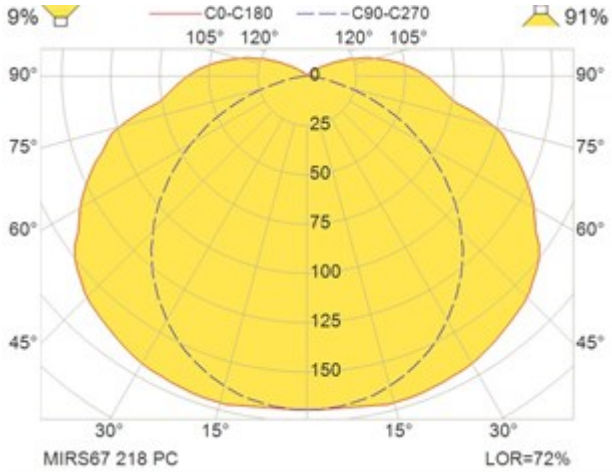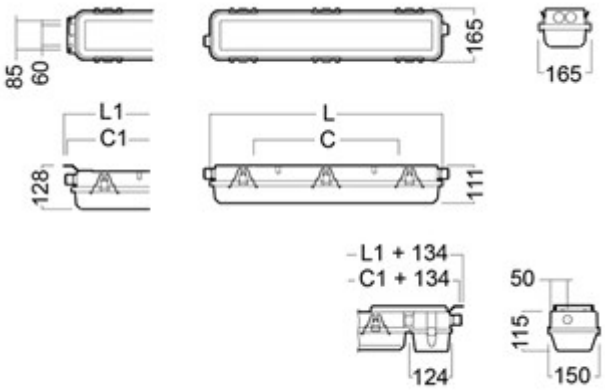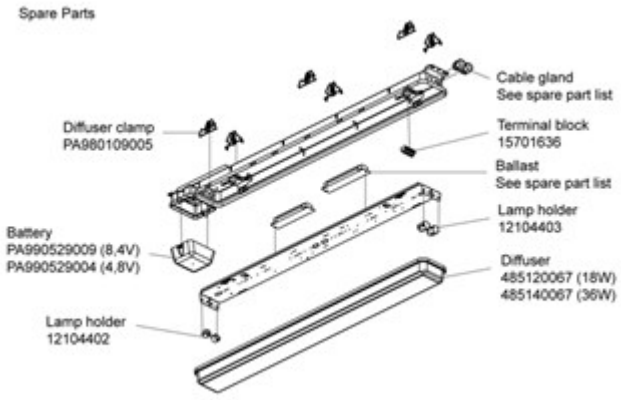
Wattage	L1	C1	L	C for Hood nut
18W	724	704	681	On request
36W	1334	1314	1291	On request
58W	1634	1614	1591	On request